General

The Hallite 500 series is a family of high performance loaded

'U' cups are designed to interchange in standard North American housings. Since the launch in 1988, these seals have become accepted as the leading alternative choice for quality and cost effectiveness.

Hallite offer three profiles of single acting seals in the 500 Series (511,512,513). Covering most applications from mobile hydraulics to industrial cylinders, all have been well proven and are standard fitment in many of the leading cylinder and O.E.M. manufacturers worldwide. Each catalogue page outlines the operating condition parameters to give optimum performance and life. For applications outside, or at the extreme, of these figures, it is recommended that guidance is sought from Hallite Seals.

Material

All Hallite materials are subject to stringent quality

controls to ensure consistancy both in the manufacture and in use. The 500 series are manufactured, as a standard, in polyurethane / nitrile 'O' ring. Other materials are available for combating the effects of temperature extremes or fluid variations.

Media

All seals are suitable for mineral based hydraulic fluids. As the fluid can have enormous consequences for the life and performance, particularly at higher temperatures, it is advised that guidance is sought if non-standard fluid is used.

Extrusion Gaps

Extrusion gaps can be minimised by the use of glands or pistons with integral bearings. However, better bearing performance is often achieved by the use of remote bearings, which inevitably means that the extrusion gap is increased to achieve adequate metal to metal clearance, (refer to data sheets for individual seal types).

For this reason, guidance should be sought from the Hallite technical department if remote bearings are to be used with seals under 1/4" cross section.

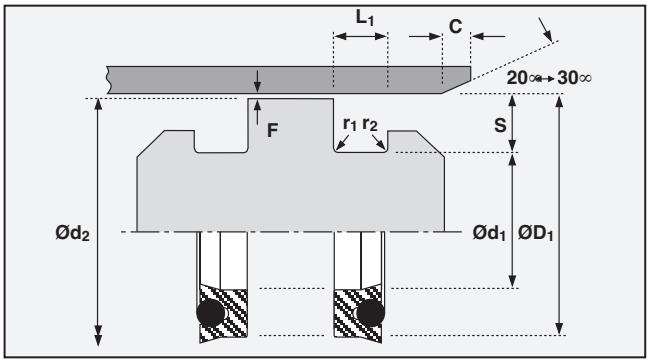

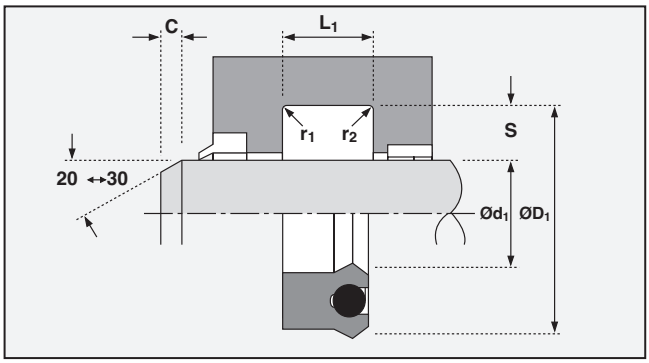

500 series (inch) - specified tolerances for piston applications			
Seal Cross Section (S)	Bore Tolerance ($ØD_1$)	Piston Spigot Tolerance ($Ød_1$)	Groove Width Tolerance (L_1)
1/8" (.125)	+0.002 -0.000	+0.000 -0.002	+0.015 -0.000
3/16" (.187)	+0.002 -0.000	+0.000 -0.002	+0.015 -0.000
1/4" (.250)	+0.003 -0.000	+0.000 -0.003	+0.015 -0.000
5/16" (.312)	+0.003 -0.000	+0.000 -0.004	+0.015 -0.000
3/8" (.375)	+0.003 -0.000	+0.000 -0.005	+0.015 -0.000
1/2" (.500)	+0.004 -0.000	+0.000 -0.007	+0.015 -0.000

500 series (inch) - specified tolerances for rod applications			
Seal Cross Section (S)	Rod Tolerance ($ØD_1$)	Gland Bore Tolerance ($Ød_1$)	Groove Width Tolerance (L_1)
1/8" (.125)	+0.000 -0.001	+0.002 -0.000	+0.015 -0.000
3/16" (.187)	+0.000 -0.002	+0.002 -0.000	+0.015 -0.000
1/4" (.250)	+0.000 -0.002	+0.003 -0.000	+0.015 -0.000
5/16" (.312)	+0.000 -0.002	+0.004 -0.000	+0.015 -0.000
3/8" (.375)	+0.000 -0.002	+0.005 -0.000	+0.015 -0.000
1/2" (.500)	+0.000 -0.003	+0.007 -0.000	+0.015 -0.000

notes

Hallite

511

Design

The Hallite 511 is a loaded U cup utilising a polyurethane or polyester shell energised by a high specification resilient O ring.

At zero or low pressure, the O ring helps to increase the sealing force preventing any bypass. As pressure rises the sealing force increases and the O ring ensures complete lip actuation under most conditions.

The symmetry of the seal allows it to be used on both rod and piston applications and its flexibility enables easy installation. Ideally suited for single acting applications, the Hallite 511 can also be fitted back to back for use in double acting applications.

Features

- Flexible for easy installation
- Excellent resistance to abrasion
- Positive lip actuation
- Knife trimmed precision sealing lips
- Compact housing
- Wide range of sizes

Material

Face Material - O Ring
Standard material
Polyurethane – NBR _ _ _ _ _ **10**

Material options:
Polyester - NBR _ _ _ _ _ **11**
Hallite 361 – NBR _ _ _ _ _ **16**

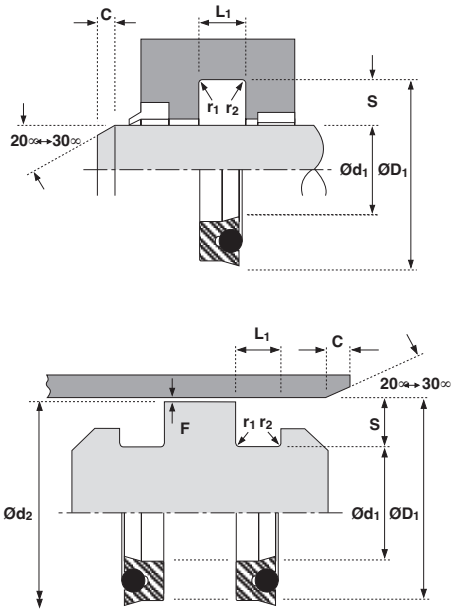

Technical details

	Metric		Inch	
Operating conditions				
Maximum Speed	0.5 m/sec		1.5 ft/sec	
Temperature Range	-40°C +110°C		-40°F +230°F	
Maximum Pressure	350 bar		5000 p.s.i.	
Maximum extrusion gap	**Figures show the maximum permissible gap all on one side, for rod seals using minimum rod Ø and maximum clearance Ø and for piston seals using the minimum clearance Ø and maximum bore Ø. Refer to Housing Design section.**			
(1/4" section and above)				
Pressure bar	160	250	350	
Pressure p.s.i.	2400	3750	5000	
Maximum Gap in	0.024	0.020	0.016	
Surface roughness	**µmRa**	**µmRt**	**µinCLA**	**µinRMS**
Dynamic Sealing Face – Rod $Ød_1$	0.1 < > 0.4	4 max	4 < > 16	5 < > 18
Static Sealing Face – Rod $ØD_1$	1.6 max	10 max	63 max	70 max
Dynamic Sealing Face – Piston $ØD_1$	0.1 < > 0.4	4 max	4 < > 16	5 < > 18
Static Sealing Face – Piston $Ød_1$	1.6 max	10 max	63 max	70 max
Static Housing Faces L_1	3.2 max	16 max	125 max	140 max

Chamfers & Radii							
Groove Section ≤ S in	0.125	0.187	0.250	0.312	0.375	0.500	0.625
Min Chamfer C in	0.093	0.093	0.125	0.156	0.187	0.187	0.217
Max Fillet Rad r_1 in	0.008	0.008	0.016	0.032	0.032	0.032	0.047
Max Fillet Rad r_2 in	0.016	0.016	0.032	0.047	0.047	0.047	0.062

Tolerances **Please refer to specified tolerances in the introduction page - Hallite 500 Series**

rod/piston seals

Hallite

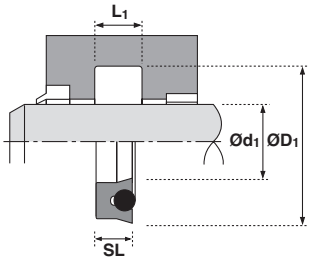

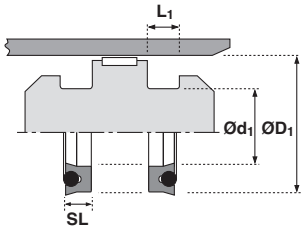

Ød1	ØD1	SL	L1	STD. REF.	PART No.
1/8 CROSS SECTION					
.125	.375	.125	.138	12500125	8900810
.188	.438	.125	.138	12500187	8800110
.250	.500	.125	.138	12500250	8800210
.313	.563	.125	.138	12500312	8902810
.375	.625	.125	.138	12500375	8800410
.437	.687	.125	.138	12500437	8905110
.500	.750	.125	.138	12500500	8800610
.563	.813	.125	.138	12500562	8844610
.625	.875	.125	.138	12500625	8800810
.688	.938	.125	.138	12500687	8801010
.750	1.000	.125	.138	12500750	8801110
.813	1.063	.125	.138	12500812	8815310
.875	1.125	.125	.138	12500875	8801410
.938	1.188	.125	.138	12500937	8844810
1.000	1.250	.125	.138	12501000	8801610
1.063	1.313	.125	.138	12501062	8801810
1.125	1.375	.125	.138	12501125	8801910
1.250	1.500	.125	.138	12501250	8802210
1.375	1.625	.125	.138	12501375	8802410
1.500	1.750	.125	.138	12501500	8802610
1.625	1.875	.125	.138	12501625	8802810
1.750	2.000	.125	.138	12501750	8803010
1.875	2.125	.125	.138	12501875	8803210
2.000	2.250	.125	.138	12502000	8803410
2.250	2.500	.125	.138	12502250	8803810
2.375	2.625	.125	.138	12502375	8815610
2.500	2.750	.125	.138	12502500	8800310
2.750	3.000	.125	.138	12502750	8817910
2.875	3.125	.125	.138	12502875	8814210
3.000	3.250	.125	.138	12503000	8804510
3.250	3.500	.125	.138	12503250	8819610
3.500	3.750	.125	.138	12503500	8815810
3.750	4.000	.125	.138	12503750	8818710
3.875	4.125	.125	.138	12503875	8816510
4.000	4.250	.125	.138	12504000	8805210
4.250	4.500	.125	.138	12504250	8819710
4.750	5.000	.125	.138	12504750	8818110
4.875	5.125	.125	.138	12504875	8816710

Ød1	ØD1	SL	L1	STD. REF.	PART No.
5/32 CROSS SECTION					
1.000	1.313	.156	.172	15601000	8810110
1.188	1.500	.156	.172	15601187	8811010
1.250	1.563	.156	.172	15601250	8813810
1.375	1.688	.156	.172	15601375	8813910
3/16 CROSS SECTION					
.375	.750	.188	.207	18700375	8902910
.500	.875	.188	.207	18700500	8800710
.625	1.000	.188	.207	18700625	8800910
.750	1.125	.188	.207	18700750	8801210
.875	1.250	.188	.207	18700875	8801510
1.000	1.375	.188	.207	18701000	8801710
1.125	1.500	.188	.207	18701125	8802010
1.188	1.563	.188	.207	18701187	8851710
1.250	1.625	.188	.207	18701250	8802310
1.375	1.750	.188	.207	18701375	8802510
1.500	1.875	.188	.207	18701500	8802710
1.625	2.000	.188	.207	18701625	8802910
1.750	2.125	.188	.207	18701750	8803110
1.875	2.250	.188	.207	18701875	8803310
2.000	2.375	.188	.207	18702000	8803510
2.125	2.500	.188	.207	18702125	8803710
2.250	2.625	.188	.207	18702250	8803910
2.375	2.750	.188	.207	18702375	8804010
2.500	2.875	.188	.207	18702500	8804110
2.625	3.000	.188	.207	18702625	8804210
2.750	3.125	.188	.207	18702750	8804410
2.875	3.250	.188	.207	18702875	8851010
3.000	3.375	.188	.207	18703000	8804610
3.125	3.500	.188	.207	18703125	8804710
3.250	3.625	.188	.207	18703250	8804810
3.375	3.750	.188	.207	18703375	8854210
3.500	3.875	.188	.207	18703500	8805010
3.625	4.000	.188	.207	18703625	8805110
3.750	4.125	.188	.207	18703750	8879410
3.875	4.250	.188	.207	18703875	8823510
4.000	4.375	.188	.207	18704000	8805310
4.125	4.500	.188	.207	18704125	8805410

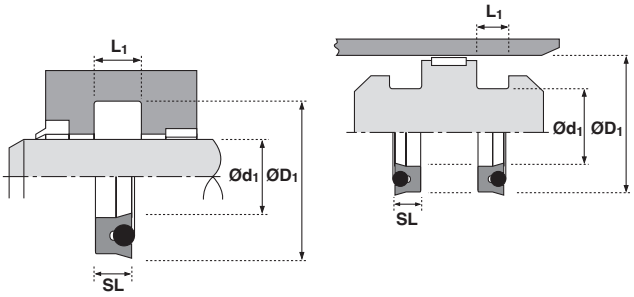

Ød1	ØD1	SL	L1	STD. REF.	PART No.
4.250	4.625	.188	.207	18704250	8805510
4.375	4.750	.188	.207	18704375	8854310
4.500	4.875	.188	.207	18704500	8805710
4.625	5.000	.188	.207	18704625	8879510
4.875	5.250	.188	.207	18704875	8823610
5.125	5.500	.188	.207	18705125	8908510

1/4 CROSS SECTION

Ød1	ØD1	SL	L1	STD. REF.	PART No.
.313	.812	.250	.275	25000312	8824710
.375	.875	.250	.275	25000375	8865810
.500	1.000	.250	.275	25000500	8806310
.625	1.125	.250	.275	25000625	8806410
.750	1.250	.250	.275	25000750	8806510
.875	1.375	.250	.275	25000875	8806610
1.000	1.500	.250	.275	25001000	8806810
1.125	1.625	.250	.275	25001125	8807010
1.250	1.750	.250	.275	25001250	8807210
1.375	1.875	.250	.275	25001375	8807310
1.500	2.000	.203	.223	25001500-203	8801310
1.500	2.000	.250	.275	25001500	8807510
1.625	2.125	.250	.275	25001625	8807710
1.750	2.250	.250	.275	25001750	8807810
1.875	2.375	.250	.275	25001875	8808010
2.000	2.500	.250	.275	25002000	8808210
2.125	2.625	.250	.275	25002125	8808410
2.250	2.750	.250	.275	25002250	8808610
2.375	2.875	.250	.275	25002375	8808810
2.500	3.000	.203	.223	25002500-203	8803610
2.500	3.000	.250	.275	25002500	8809010
2.625	3.125	.250	.275	25002625	8809110
2.750	3.250	.250	.275	25002750	8809210
2.875	3.375	.250	.275	25002875	8809410
3.000	3.500	.203	.223	25003000-203	8816110
3.000	3.500	.250	.275	25003000	8809610
3.250	3.750	.250	.275	25003250	8810010
3.375	3.875	.250	.275	25003375	8850710
3.500	4.000	.203	.223	25003500-203	8817210
3.500	4.000	.250	.275	25003500	8810310
3.625	4.125	.250	.275	25003625	8810510
3.750	4.250	.250	.275	25003750	8810610
3.875	4.375	.250	.275	25003875	8810710
4.000	4.500	.250	.275	25004000	8810810
4.250	4.750	.250	.275	25004250	8811210
4.375	4.875	.250	.275	25004375	8811410
4.500	5.000	.203	.223	25004500-203	8804310
4.500	5.000	.250	.275	25004500	8811610
4.625	5.125	.250	.275	25004625	8811810
4.750	5.250	.250	.275	25004750	8811910
4.875	5.375	.250	.275	25004875	8856510
5.000	5.500	.250	.275	25005000	8812010
5.250	5.750	.250	.275	25005250	8812210
5.500	6.000	.250	.275	25005500	8812410
5.750	6.250	.250	.275	25005750	8812610
6.000	6.500	.250	.275	25006000	8812810
6.250	6.750	.250	.275	25006250	8856610
6.500	7.000	.250	.275	25006500	8813110
6.750	7.250	.250	.275	25006750	8813210
7.000	7.500	.250	.275	25007000	8813310
7.250	7.750	.250	.275	25007250	8856710
7.500	8.000	.250	.275	25007500	8813410
8.000	8.500	.250	.275	25008000	8813610
8.250	8.750	.250	.275	25008250	8856810
8.500	9.000	.250	.275	25008500	8813710

5/16 CROSS SECTION

Ød1	ØD1	SL	L1	STD. REF.	PART No.
.250	.875	.313	.344	31200250	8899710
.375	1.000	.313	.344	31200375	8824910
.687	1.312	.312	.344	31200687	8906710
1.000	1.625	.313	.344	31201000	8806910
1.125	1.750	.313	.344	31201125	8807110
1.250	1.875	.313	.344	31201250	8870010
1.375	2.000	.313	.344	31201375	8807410
1.500	2.125	.313	.344	31201500	8807610
1.625	2.250	.313	.344	31201625	8850910
1.750	2.375	.313	.344	31201750	8807910
1.875	2.500	.313	.344	31201875	8808110
2.000	2.625	.313	.344	31202000	8808310
2.125	2.750	.313	.344	31202125	8808510

Hallite

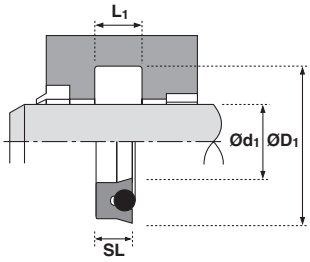

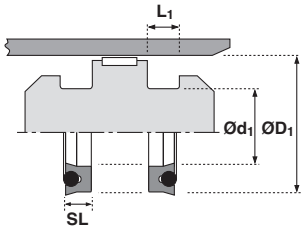

Ød1	ØD1	SL	L1	STD. REF.	PART No.
2.250	2.875	.313	.344	31202250	8808710
2.375	3.000	.313	.344	31202375	8808910
2.500	3.125	.313	.344	31202500	8870110
2.625	3.250	.313	.344	31202625	8851110
2.750	3.375	.313	.344	31202750	8809310
2.875	3.500	.313	.344	31202875	8809510
3.000	3.625	.313	.344	31203000	8809710
3.125	3.750	.313	.344	31203125	8809910
3.250	3.875	.313	.344	31203250	8879610
3.375	4.000	.313	.344	31203375	8810210
3.500	4.125	.313	.344	31203500	8810410
3.550	4.175	.250	.275	31203550-250	8899510
3.625	4.250	.313	.344	31203625	8851210
3.750	4.375	.313	.344	31203750	8870210
3.875	4.500	.313	.344	31203875	8870310
4.000	4.625	.313	.344	31204000	8810910
4.125	4.750	.313	.344	31204125	8811110
4.250	4.875	.313	.344	31204250	8811310
4.375	5.000	.313	.344	31204375	8811510
4.500	5.125	.313	.344	31204500	8811710
4.750	5.375	.313	.344	31204750	8879710
5.000	5.625	.313	.344	31205000	8812110
5.250	5.875	.313	.344	31205250	8856910
5.375	6.000	.313	.344	31205375	8812310
5.500	6.125	.313	.344	31205500	8812510
5.750	6.375	.313	.344	31205750	8857010
6.000	6.625	.313	.344	31206000	8812910
6.250	6.875	.313	.344	31206250	8857110
6.375	7.000	.313	.344	31206375	8813010
6.500	7.125	.313	.344	31206500	8876610
6.750	7.375	.313	.344	31206750	8857210
7.000	7.625	.313	.344	31207000	8879310
7.250	7.875	.313	.344	31207250	8857310
7.375	8.000	.313	.344	31207375	8876710
7.500	8.125	.313	.344	31207500	8813510
7.750	8.375	.313	.344	31207750	8857410
8.000	8.625	.313	.344	31208000	8876910
8.250	8.875	.313	.344	31208250	8857510
8.500	9.125	.313	.344	31208500	8857610

Ød1	ØD1	SL	L1	STD. REF.	PART No.
3/8 CROSS SECTION					
1.000	1.750	.375	.413	37501000	8819110
1.250	2.000	.375	.413	37501250	8814310
1.375	2.125	.375	.413	37501375	8814410
1.500	2.250	.375	.413	37501500	8814510
1.625	2.375	.375	.413	37501625	8814710
1.750	2.500	.375	.413	37501750	8814810
2.000	2.750	.375	.413	37502000	8814910
2.125	2.875	.375	.413	37502125	8815110
2.250	3.000	.375	.413	37502250	8869910
2.500	3.250	.375	.413	37502500	8815410
2.750	3.500	.375	.413	37502750	8815710
3.000	3.750	.375	.413	37503000	8815910
3.250	4.000	.375	.413	37503250	8816210
3.375	4.125	.375	.413	37503375	8857710
3.500	4.250	.375	.413	37503500	8816410
3.625	4.375	.375	.413	37503625	8824610
3.750	4.500	.375	.413	37503750	8816610
3.875	4.625	.375	.413	37503875	8819210
4.000	4.750	.375	.413	37504000	8816810
4.125	4.875	.375	.413	37504125	8853210
4.250	5.000	.375	.413	37504250	8817010
4.500	5.250	.375	.413	37504500	8817310
4.750	5.500	.375	.413	37504750	8817510
5.000	5.750	.375	.413	37505000	8817610
5.250	6.000	.375	.413	37505250	8817810
5.500	6.250	.375	.413	37505500	8818010
5.625	6.375	.375	.413	37505625	8814110
5.750	6.500	.375	.413	37505750	8818210
6.000	6.750	.375	.413	37506000	8818310
6.250	7.000	.375	.413	37506250	8818510
6.500	7.250	.375	.413	37506500	8818610
6.750	7.500	.375	.413	37506750	8818810
7.000	7.750	.375	.413	37507000	8877010
7.250	8.000	.375	.413	37507250	8818910
7.500	8.250	.375	.413	37507500	8877110
7.625	8.375	.375	.413	37507625	8814010
7.750	8.500	.375	.413	37507750	8853910
8.000	8.750	.375	.413	37508000	8869210
8.250	9.000	.375	.413	37508250	8851410

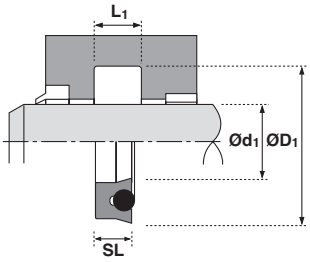

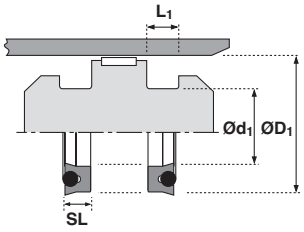

$Ød_1$	$ØD_1$	SL	L_1	STD. REF.	PART No.
1/2 CROSS SECTION					
1.500	2.500	.500	.550	50001500	8814610
1.875	2.875	.500	.550	50001875	8825510
2.000	3.000	.500	.550	50002000	8815010
2.125	3.125	.500	.550	50002125	8853110
2.500	3.500	.500	.550	50002500	8815510
2.750	3.750	.500	.550	50002750	8900010
3.000	4.000	.500	.550	50003000	8816010
3.375	4.375	.500	.550	50003375	8866910
4.000	5.000	.500	.550	50004000	8816910
4.250	5.250	.500	.550	50004250	8858910
4.500	5.500	.500	.550	50004500	8817410
5.000	6.000	.500	.550	50005000	8817710
5.125	6.125	.500	.550	50005125	8851810
5.250	6.250	.500	.550	50005250	8900110
5.375	6.375	.500	.550	50005375	8863610
6.000	7.000	.500	.550	50006000	8818410
6.250	7.250	.500	.550	50006250	8857810
6.500	7.500	.500	.550	50006500	8815210
7.000	8.000	.500	.550	50007000	8851310
7.250	8.250	.500	.550	50007250	8857910
7.375	8.375	.500	.550	50007375	8863910
7.500	8.500	.500	.550	50007500	8851610
8.000	9.000	.500	.550	50008000	8819010
8.125	9.125	.500	.550	50008125	8853810
9.000	10.000	.500	.550	50001000	8905410

$Ød_1$	$ØD_1$	SL	L_1	STD. REF.	PART No.
5/8 CROSS SECTION					
2.750	4.000	.625	.688	62502750	8819310
3.250	4.500	.625	.688	62503250	8822410
4.250	5.500	.625	.688	62504250	8819810
4.750	6.000	.625	.688	62504750	8819410
6.500	7.750	.625	.688	62506500	8819910
6.750	8.000	.625	.688	62506750	8819510

notes